ORDER FORM

No.M222B51
2022/2/11

Beijing Feixing-Taida Microwave Device Co. , Ltd.

株式会社サンケン
〒101-0047日本国東京都千代田区内神田3-9-3森元ビル7F
TEL (03)3256-9952 FAX (03)3256-9953
E-mail: sanken@pop21.odn.ne.jp

Attn: Zhang Qiang

Delivery Date: **11 Mar. 2022**
Port of Destination: **SANKEN JAPAN**

Term of Payment:

		吳

Total amount	7,200		tax 0 %	tax amount	0
No.	Item	Qty.	unit	price	
1	GLC-42(4300±100MHz,SMA-Female)	12	pcs	600	Coaxial Isolator
					RoHS Comliant
	Total	12		7,200	RMBYuan

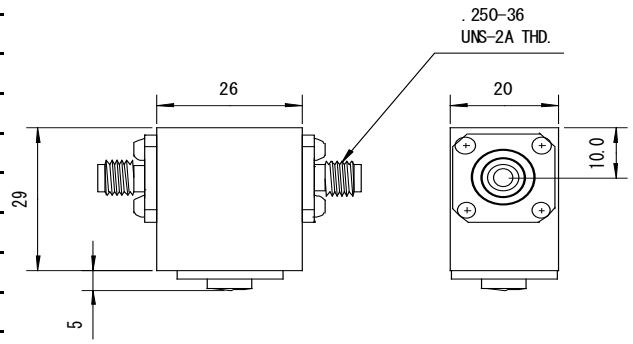

SANKEN